ELECTRIC = AVAILABLE IN BOOTH

Food Vendors

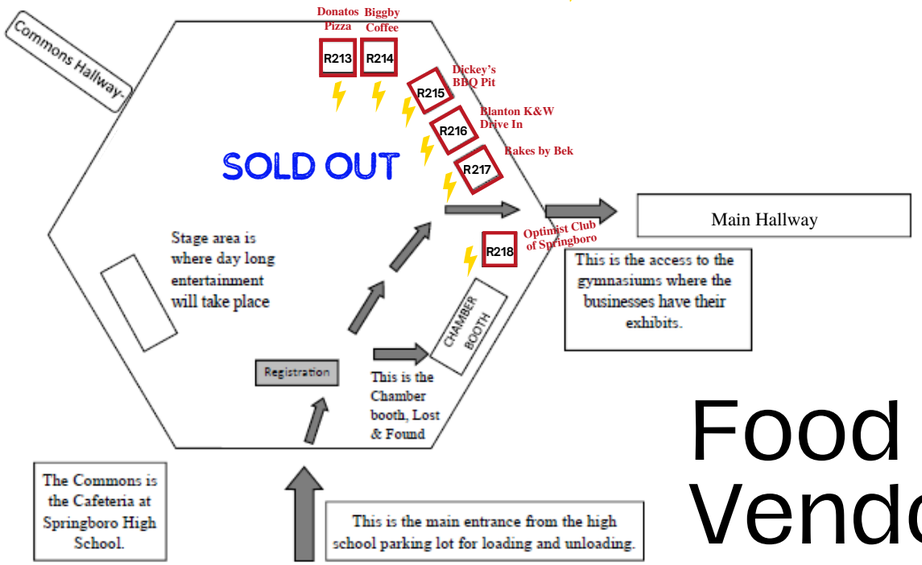

Large Gym

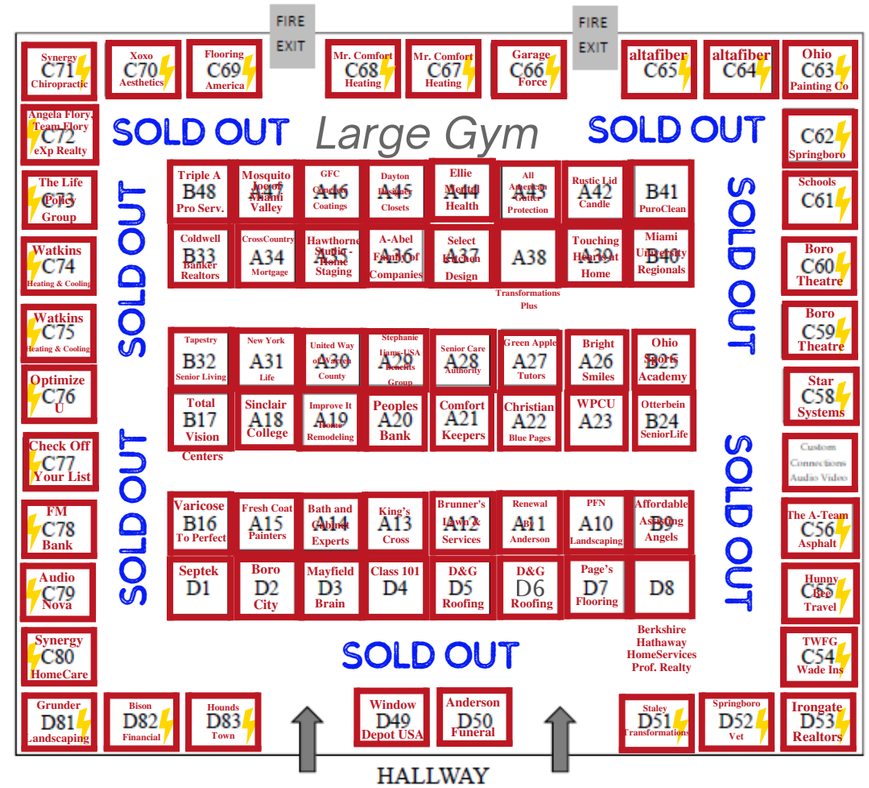

Small Gym

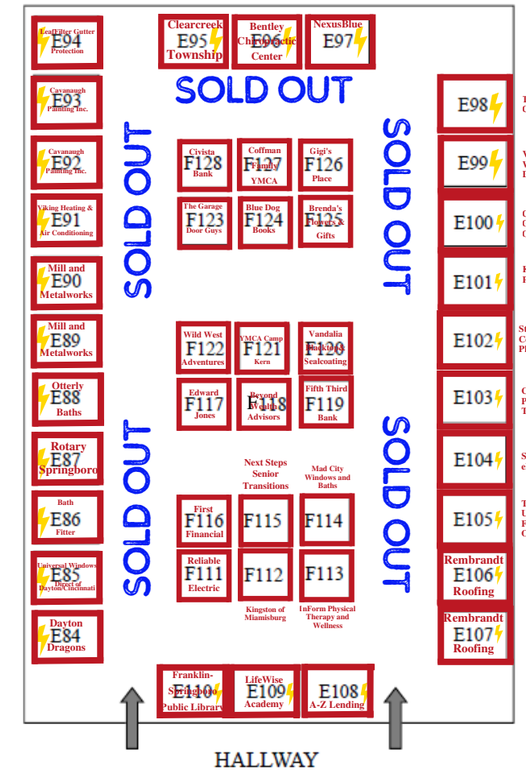

Main Hallway

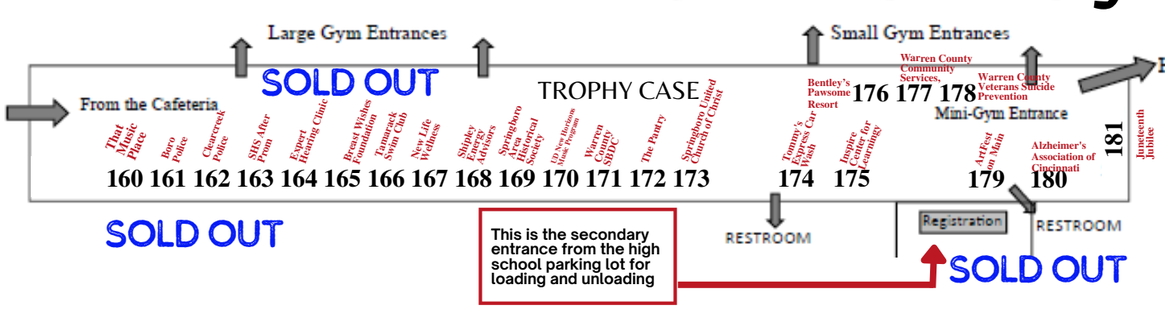
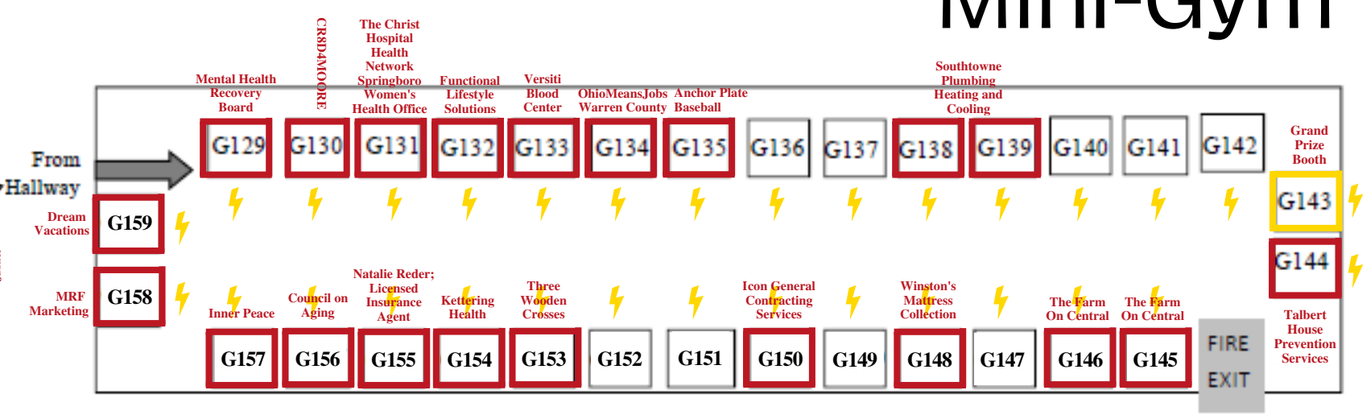
Mini-Gym